# PRODUCT SPECIFICATIONS FOR ITEM EH223B

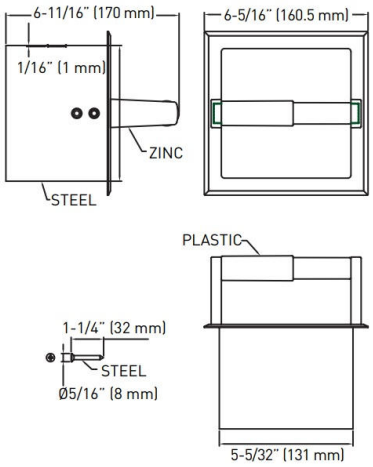


| FINISH | WALL OPENING | MATERIAL | ROLLER |
|---|---|---|---|
| **POLISHED CHROME** | 5-1/4" W x 5-1/4" H (133 mm x 133 mm) | ZINC/STEEL | WHITE PLASTIC |